Related technical parameters of suspension crawler vehicle

1. Parameter Information

Suspension crawler chassis	
Parameter name	Specifications
Measurements	27.3 × 19.3 × 9.4 cm
weight	1.4kg
Maximum speed	3m/s
climbable	35°
Load	10kg
Supports the use of the master controller	STM32, Arduino, Raspberry PI, Jeson Nano

Suspension crawler deck

Parameter name	Specifications	
Measurements	Width	Length
	14.3 cm	27.0 cm
material	Aluminum alloy	
Weight	165g	
colour	black	

STM32 controller	
Parameter name	Specifications
Motor driver chip	YX4055
Power output	5v/Vin
VM power supply range	5-12.6V
5V Output current	1A
Hall signal logic output voltage	5V
Drive signal logic input voltage	0-5V

Single rated drive current	2A
Maximun peak current of a single channel	2.5A
Motor drive chip protection	Overcurrent protection
Weight	38g
dimension	85 × 60 × 16 mm

520 encoder DC gear motor	
Parameter name	Specifications
Rated voltage	12V
Rated current	0.1A
Voltage range	7-13V
Rated torque	0.15N.m
Motor type	Permanent magnet brush
Deceleration ratio	45:1
Locked-rotor current	1.5A

Gridlock torque	0.5N.m
Output shaft	Diameter 6mmD type eccentric shaft
Speed before reduction	6500rpm
Reduced speed	150±10rpm
Encoder type	Hall encoder

2. Dimensional drawing

01 Add high level metal base plate size parameters

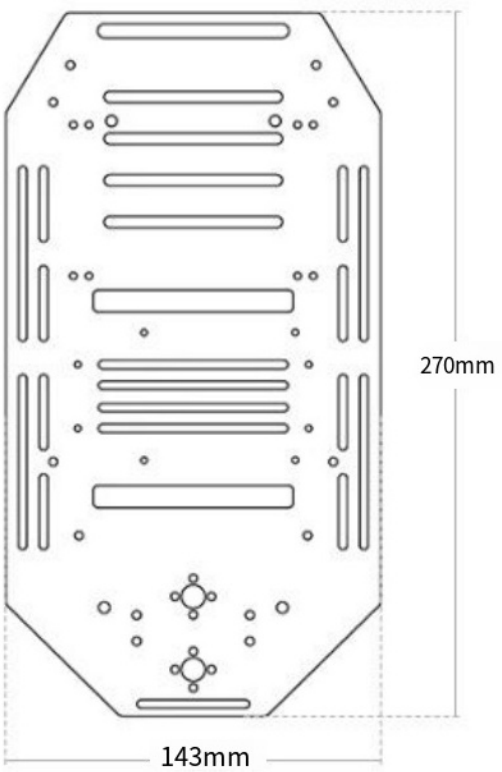

02 STM32 Controller dimensions

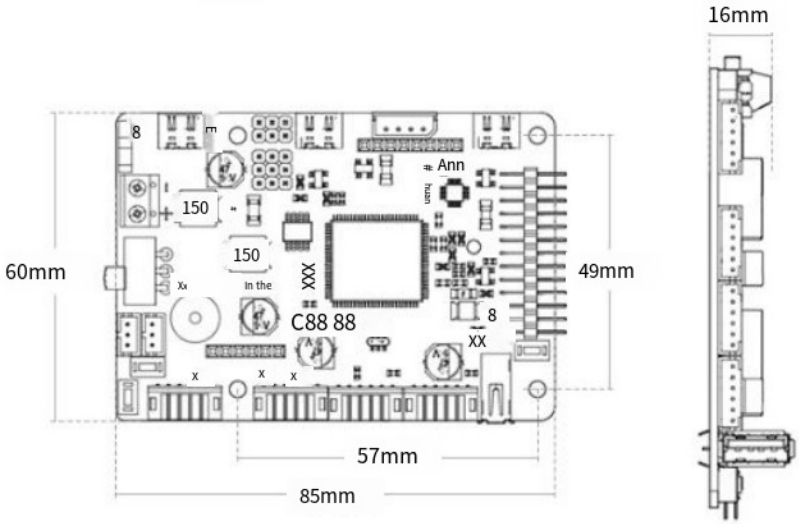
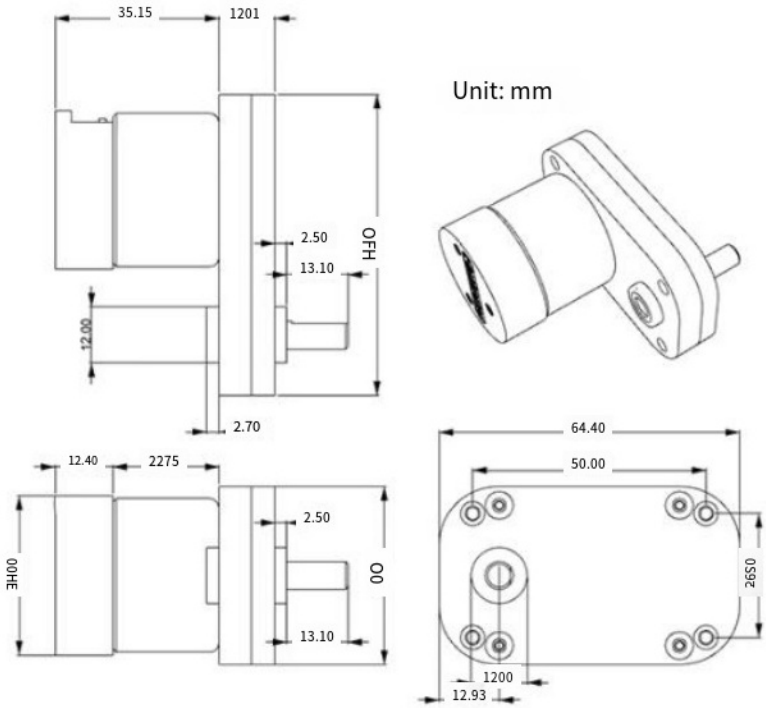
03 520 encoder DC gear motor size parameters